Closed Swage Terminal Talurit® STTE

Product information

The STTE swage terminals are validated according to the TALURIT® system for mechanical splicing. Swage terminals are made from special high-quality carbon steel. Controlled mechanical properties by our special treatment for cold swaging.

The STTE swage terminals have an efficiency rating of more than the required 90% of MBL according to the type testing requirement of the EN 13411-8 standard, which includes fatigue testing. In many cases and by ordinary break tests it is common to reach 100% based on the catalog strength of the wire rope.

APPLICATIONS
Swage terminals or sockets have a wide range of applications from stay wires in bridges to crane ropes and pendant lines. As per the TALURIT system validation, we can offer a range that is suitable for many types of special wire ropes with high tensile grades.

Features: STTE is approved for up to 2160 tensile grade wire ropes.
Material: TALURIT-Steel, fine grain. Special treatment for cold swaging.
Marking: According to standard
Temperature range: -40°C – 150°C
Finish: Ungalvanised.
Standard: EN 13411-8
Note: See the manufacturer's product data sheet in the tab "Document" for guidance on dimension selection.
Warning: Swage terminals are not recommended for use on fiber core rope.

Part code	Rope Ø range mm	Size	Max. after swage dia mm	A mm	B mm	C mm	D mm	E mm	H mm	K mm	L mm	Weight kg
1207STTE14	5.8-6.7	1/4	11,2	12,6	6,9	38,1	19,1	12,7	54	111,1	88,9	0.2
1207STTE516	6.8-8.3	5/16	17,5	19,6	8,6	42,9	22,2	17,5	81	139,7	114,3	0.3
1207STTE38	8.4-10	3/8	17,5	19,6	10,3	42,9	22,2	17,5	81	139,7	114,3	0.3
1207STTE716	10.1-11.7	7/16	22,4	24,9	12,3	50,8	27	22,2	108	176,2	146,1	0.7
1207STTE12	11.8-13.3	1/2	22,4	24,9	13,9	50,8	27	22,4	108	176,2	146,1	0.6
1207STTE916	13.4-15	9/16	28,4	31,9	15,5	63,5	31,8	28,6	134,9	222,3	184,2	1.3
1207STTE58	15.1-16.7	5/8	28,4	31,9	17,1	63,5	31,8	28,6	134,9	222,3	184,2	1.3
1207STTE34	16.8-19.8	3/4	35,1	39,2	20,2	76,2	36,5	33,3	161,9	263,5	219,1	2.3
1207STTE78	19.9-23.3	7/8	38,1	43,2	23,8	88,9	42,9	38,1	188,9	308	257,2	3.4
1207STTE1	23.4-26.6	1	44,5	50,2	27	101,6	52,4	44,5	215,9	349,3	292,1	5.1
1207STTE118	26.7-29.8	1-1/8	50,8	57	30,2	114,3	58,8	50,8	242,9	387,4	323,9	7.3
1207STTE114	29.9-33.3	1-1/4	57,2	64,1	33,7	127	65,1	57,2	269,9	438,2	365,1	10.3
1207STTE138	33.4-36.5	1-3/8	63,5	71,1	36,9	133,4	65,1	57,2	296,9	479,4	400,1	13.2
1207STTE112	36.6-39.7	1-1/2	69,9	78,1	40,1	139,7	71,5	63,5	323,9	517,5	431,8	17
1207STTE134	39.8-46.7	1-3/4	76,2	86	47,2	171,5	90,5	76,2	377,8	609,6	508	25.3
1207STTE2	46.8-53.2	2	88,9	99,9	53,6	196,9	96,9	82,6	431,8	698,5	584,2	40.8
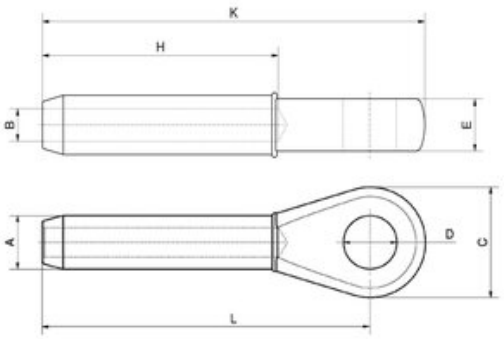
Blueprint