Lifting Solutions Group
Axel Johnson International

Standard Reeve Crane Blocks 5 sheaves

Product information



General:
- Standard Reeve Crane Blocks may be used on a wide variety of land based cranes such as mobile and crawler cranes. They are an excellent choice where frequent easy block change is not a required main feature, or lifting height is limited.
- Double sealed maintenance free roller bearings.
- Design Factor of Safety of 4:1.
- Forged high tensile steel DIN hooks.
- Ductile iron sheaves, featuring graphite lubricated groove.
- High impact resistant side plates.
- Operational temperature range -40 up to +80°C.
- Lubrication on hook suspension.
- Short design for increased lifting height.
- Safety latch with locking pin.
- C3M finish in signal yellow.

Options:
- Double hook.
- Double hook with shackle hole.
- Quad hook.
- Shackle stud eye.

Important:
Inquiries for custom versions are welcome!

... *Read more*

Traction Levage
marketingtl@traclev.com

© November 2026 - All Rights Reserved

Lifting Solutions Group
Axel Johnson International

Standard Reeve Crane Blocks 5 sheaves

Blueprint

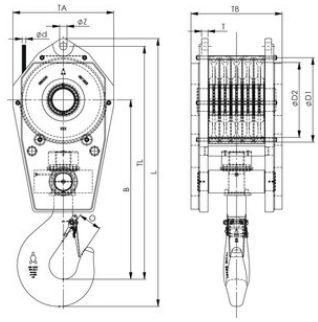

Technical data

Part code	WLL ton	Model	Rope Ø mm	Sheave dia. mm	Hook size	øD1 mm	øD2 mm	B mm	O mm	TA mm	TB mm	TLmm mm	L mm	T mm	øZ mm	Weight kg
6097SRB35516550E	50	SRB 355 .16 .5 .50 .E	16	410 / 355	16	410	355	838	87	500	442	1,133	1,305	28	32	500
6097SRB36019563E	63	SRB 360 .19 .5 .63 .E	19	410 / 360	16	410	360	992	87	500	438	1,198	1,375	35	37	600
6097SRB36019580E	80	SRB 360 .19 .5 .80 .E	19	410 / 360	20	410	360	992	110	500	538	1,282	1,477	35	37	820
6097SRB40019580E	80	SRB 400 .19 .5 .80 .E	19	460 / 400	20	460	400	1,034	110	570	542	1,364	1,564	40	37	835
6097SRB40022580E	80	SRB 400 .22 .5 .80 .E	22	460 / 400	20	460	400	1,034	110	570	542	1,364	1,564	40	43	835
6097SRB45022580E	80	SRB 450 .22 .5 .80 .E	22	515 / 450	20	515	450	1,073	110	600	555	1,431	1,632	40	43	1,025
6097SRB450245100E	100	SRB 450 .24 .5 .100 .E	24	515 / 450	25	515	450	1,128	132	600	555	1,486	1,416	45	52	1,120
6097SRB450265100E	100	SRB 450 .26 .5 .100 .E	26	515 / 450	25	515	450	1,128	132	600	555	1,486	1,716	45	52	1,120
6097SRB528245125E	125	SRB 528 .24 .5 .125 .E	24	595 / 528	32	595	528	1,263	137	710	642	1,696	1,946	45	52	1,820
6097SRB528265125E	125	SRB 528 .26 .5 .125 .E	26	595 / 528	32	595	528	1,263	137	710	642	1,696	1,946	45	52	1,820
6097SRB528285125E	125	SRB 528 .28 .5 .125 .E	26	595 / 528	32	595	528	1,263	137	710	642	1,696	1,956	50	59	1,850
6097SRB528285160E	160	SRB 528 .28 .5 .160 .E	28	595 / 528	40	595	528	1,406	167	710	562	1,796	2,078	50	59	1,820
6097SRB670285200E	200	SRB 670 .28 .5 .200 .E	28	760 / 670	50	760	670	1,641	188	870	802	2,131	2,437	50	59	3,560
6097SRB670325200E	200	SRB 670 .32 .5 .200 .E	32	760 / 670	50	760	670	1,641	188	870	802	2,131	2,442	60	66	3,560

© November 2026 - All Rights Reserved