Lifting Solutions Group
Axel Johnson International

Standard Reeve Crane Blocks 3 Sheaves

Product information



General:
- Standard Reeve Crane Blocks may be used on a wide variety of land based cranes such as mobile and crawler cranes. They are an excellent choice where frequent easy block change is not a required main feature, or lifting height is limited.
- Double sealed maintenance free roller bearings.
- Design Factor of Safety of 4:1.
- Forged high tensile steel DIN hooks.
- Ductile iron sheaves, featuring graphite lubricated groove.
- High impact resistant side plates.
- Operational temperature range -40 up to +80°C.
- Lubrication on hook suspension.
- Short design for increased lifting height.
- Safety latch with locking pin.
- C3M finish in signal yellow.

Options:
- Double hook.
- Double hook with shackle hole.
- Quad hook.
- Shackle stud eye.

Important:
Inquiries for custom versions are welcome!

... *Read more*

Traction Levage
marketingtl@traclev.com

© November 2026 - All Rights Reserved

Lifting Solutions Group
Axel Johnson International

Standard Reeve Crane Blocks 3 Sheaves

Blueprint

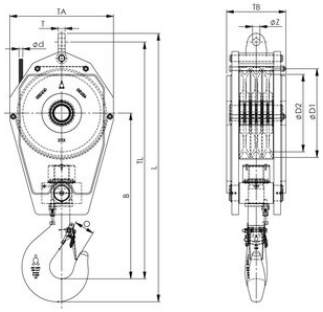

Technical data

Part code	WLL ton	Model	Rope Ø mm	Hook size	Weight kg
6097SRB26014325E	25	SRB 260 .14 .3 .25 .E	14	8	210
6097SRB26016325E	25	SRB 260 .16 .3 .25 .E	16	8	210
6097SRB28516329E	29	SRB 285 .16 .3 .29 .E	16	8	210
6097SRB32016329E	29	SRB 320 .16 .3 .29 .E	16	8	225
6097SRB35519332E	32	SRB 355 .19 .3 .32 .E	19	10	325
6097SRB36019340E	40	SRB 360 .19 .3 .40 .E	19	12	455
6097SRB40022340E	40	SRB 400 .22 .3 .40 .E	22	12	500
6097SRB40022350E	50	SRB 400 .22 .3 .50 .E	22	16	500
6097SRB40022350E	50	SRB 400 .22 .3 .50 .E	22	16	540
6097SRB45022363E	63	SRB 450 .22 .3 .63 .E	22	16	680
6097SRB45024363E	63	SRB 450 .24 .3 .63 .E	24	16	770
6097SRB45026363E	63	SRB 450 .26 .3 .63 .E	26	16	770
6097SRB52826380E	80	SRB 528 .26 .3 .80 .E	24	20	1,270
6097SRB52826380E	80	SRB 528 .26 .3 .80 .E	26	20	1,270
6097SRB528263100E	100	SRB 528 .26 .3 .100 .E	26	25	1,270
6097SRB528283100E	100	SRB 528 .28 .3 .100 .E	28	25	1,270
6097SRB670283125E	125	SRB 670 .28 .3 .125 .E	28	25	2,900
6097SRB670323125E	125	SRB 670 .32 .3 .125 .E	32	25	2,900

© November 2026 - All Rights Reserved