Lifting Eye Bolt DIN 580

Product information

Material: Steel C15E.
Marking: According to standard, CE-marked, WLL, manufacturer C15, thread.
Finish: Electro galvanized.
Standard: DIN 580
Note: The lifting eyes shall be screwed tight against the surface. When two lifting eyes are used their mutual position shall result in the two eyes at the same level. Larger angle between the slings than 90° are not tolerated. Lifting eyes can not be assembled against a surface that differs essentially from a surface perpendicular to the direction of the lift.

Safety factor: 6:1

Part code	WLL ton	Thread	d1 mm mm	d2 mm mm	d3 mm mm	d4 mm mm	h mm mm	k mm mm	lmm mm	Weight kg/100pc
421100010080	0.14	M8	M8	20	36	20	36	8	13	6
421100020080	0.23	M10	M10	25	45	25	45	10	17	11
421100030080	0.34	M12	M12	30	54	30	53	12	20	18
421100050080	0.49	M14	M14	35	63	35	62	14	27	27
421100070080	0.7	M16	M16	35	63	35	62	14	27	28
421100090080	0.85	M18	M18	40	72	40	71	16	30	44
421100120080	1.2	M20	M20	40	72	40	71	16	30	44
421100140080	1.4	M22	M22	50	90	50	90	20	36	73
421100180080	1.8	M24	M24	50	90	50	90	20	36	74
421100320080	3.2	M30	M30	65	108	60	109	24	45	166
421100460080	4.6	M36	M36	75	126	70	128	28	54	265
421100630080	6.3	M42	M42	85	144	80	147	32	63	403
421100860080	8.6	M48	M48	100	166	90	168	38	68	638

Technical data

Thread		
	WLL (ton)	
M8	0.14	0.095
M10	0.23	0.17
M12	0.34	0.24
M16	0.7	0.5
M20	1.2	0.83
M24	1.8	1.27
M30	3.2	2.6
M36	4.6	3.7
M42	6.3	5
M48	8.6	6.1
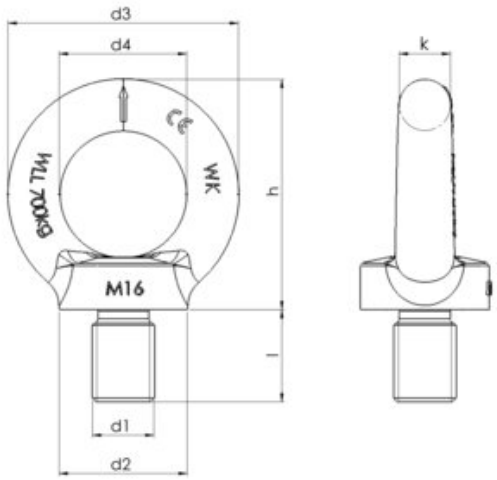
Blueprint