Lifting Solutions Group
Axel Johnson International

Hydraulic Toe Jack POWERTEX PTJ-S1

Product information



POWERTEX

PTJ-S1 is easy to operate using the detachable handle. The jack can lift using the toe of the jack or from the top plate and the capacity is the same for both lifting points.

Features:

• Safe - Each hydraulic jack is dynamic proof load tested using load of 1 x WLL throughout a full travel cycle and examined before delivery.
• Safe – the jack is equipped with overload protection device
• Housing allows 360 degree rotation for easy positioning
• Pressure relief valve operated by turning knob
• Adjustable lowering speed using the turning knob for smooth lowering
• Chromium 6 free surface treatment
• Equipped with RFID chip
• POWERTEX 2.2 certificate & EC Declaration delivered with each jack
• 14 language User manuals delivered with each jack
• QR code for on-site access to Multilanguage user manuals
• Fulfills Machinery Directive 2006/42/EC
• Low height allows easy positioning under machines

... *Read more*

Material: Robust all steel construction
Marking: According to standard, CE-mark, POWERTEX, Model, WLL, Manufacturing date and Serial number
Temperature range: -20°C up to +50°C
Finish: Powder painted
Standard: EN 1494

© November 2026 - All Rights Reserved

Lifting Solutions Group
Axel Johnson International

Hydraulic Toe Jack POWERTEX PTJ-S1

Blueprint

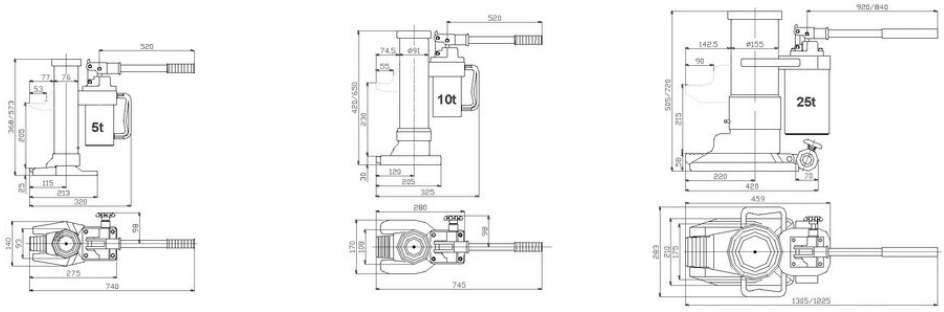

Technical data

Part code	WLL ton	Model	Hand force max. kg	Min–max lifting height of toe mm	Min–max lifting height of top mm	Weight kg
5205PTJS105	5	PTJ-S1/5000KG	38.75	25-230	368-573	25
5205PTJS110	10	PTJ-S1/10000KG	40.75	30-260	420-650	35
5205PTJS125	25	PTJ-S1/25000KG	40.75	58-273	505-720	102

© November 2026 - All Rights Reserved